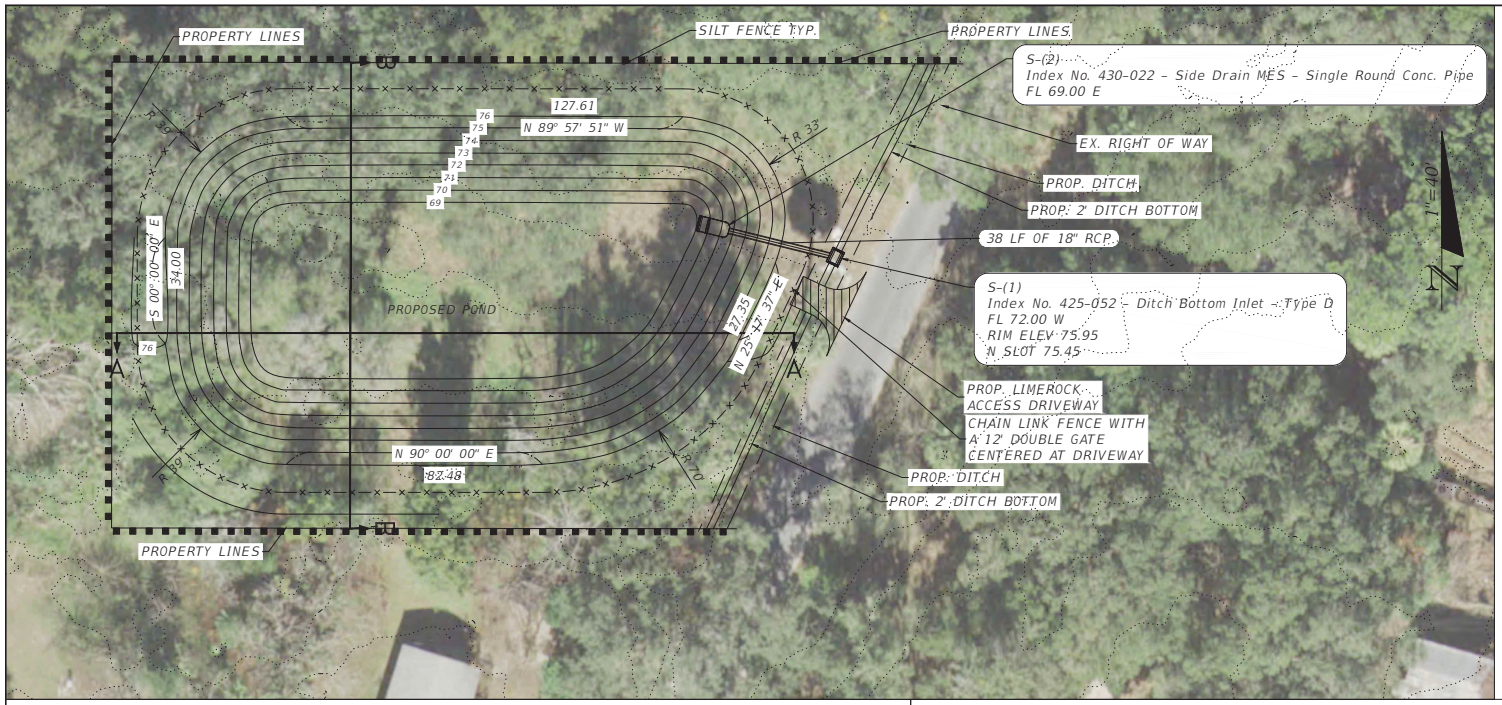

STORMWATER MANAGEMENT FACILITY NOTES:

1. IF A CONTINUOUS LIMEROCK FORMATION IS ENCOUNTERED IN THE BASIN AREA CONTACT THE ENGINEER OF RECORD. THE LIMEROCK SHALL BE EXCAVATED TO A MINIMUM DEPTH OF 3 FEET BEYOND THE BASIN UNDERCUT LIMITS. PROVIDE A SILTY SAND MIX WITH 15 TO 20 PERCENT SOIL FINES PASSING THE NO. 200 SIEVE AND HYDRAULIC CONDUCTIVITY VALUES ON THE ORDER OF 3 TO 5 FEET PER DAY. LABORATORY TESTING SHALL BE PERFORMED ON THE MIX TO DETERMINE FINAL PRODUCT. NO ADDITIONAL COMPENSATION SHALL BE CONSIDERED.

2. IF A SOLUTION PIPE SINKHOLE DOES FORM IN THE STORMWATER BASIN,, THEN THE SINKHOLE SHALL BE REPAIRED BY BACKFILLING WITH MATERIAL OF LOWER-PERMEABILITY MATERIAL, SUCH AS CLAYEY SAND (A2-6). THE MATERIAL SHALL BE COMPACTED AND THE SINKHOLE REPAIR SHOULD BRING THE SURFACE BACK TO AN ELEVATION WHICH IS SLIGHTLY ABOVE THE ORIGINAL BOTTOM, CREATING A SMALL MOUND.

3. EARTHEN BERM SHALL BE CONSTRUCTED WITH SOILS WITH A MINIMUM OF 15% SOIL FINES PASSING NO. 200 SIEVE. COMPACT BERM TO 95% MAXIMUM DENSITY PER AASHTO METHOD T-99 WITH MAXIMUM 12" LIFTS. FDOT A-3 SAND (OR ANY OTHER HIGHLY PERMEABLE MATERIAL) SHALL NOT BE USED.

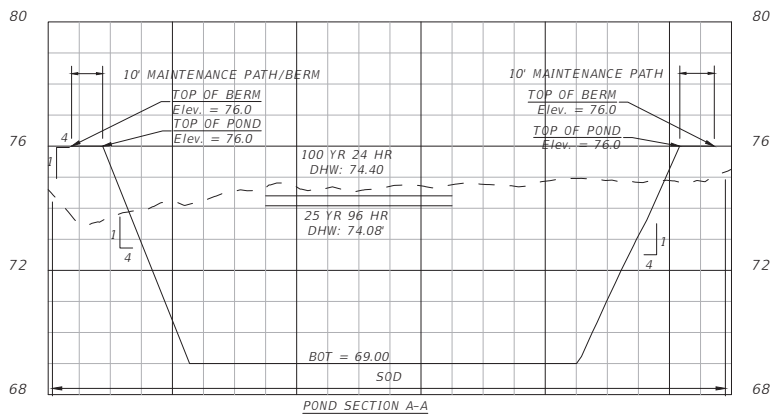

POND SECTION A-A

HORIZONTAL 1"=40'
VERTICAL 1"=10'

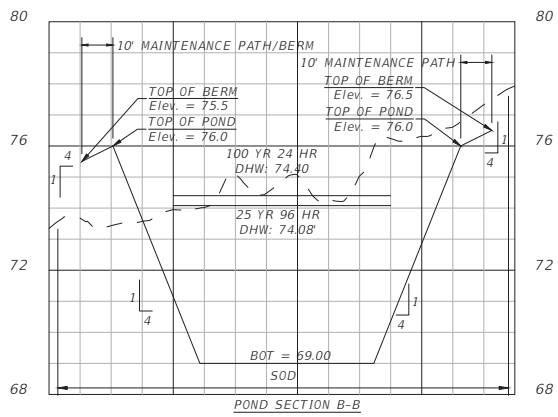

POND SECTION B-B

HORIZONTAL 1"=40'
VERTICAL 1"=10'

REVISIONS			
DATE	DESCRIPTION	DATE	DESCRIPTION

MATTHEW CANTRELL, P.E.
P.E. LICENSE NUMBER 97282
NV5
11801 RESEARCH DRIVE
ALACHUA, FL 32615
CERTIFICATE OF AUTHORIZATION 05075

STANTON WEIRSDALE

ROAD NO.	COUNTY	FINANCIAL PROJECT ID
	MARION	----

POND PLAN

SHEET NO. 5

THE OFFICIAL RECORD OF THIS SHEET IS THE ELECTRONIC FILE DIGITALLY SIGNED AND SEALED UNDER RULE 61G15-23.004, F.A.C.